ZXESM R351

Lithium-Ion Battery

User Manual

Version: V1.0

ZTE CORPORATION
ZTE Plaza, Keji Road South, Hi-Tech Industrial Park,
Nanshan District, Shenzhen, P.R.China
Postcode: 518057
Tel: +86-755-26771900
URL: http://support.zte.com.cn
E-mail: support@zte.com.cn

LEGAL INFORMATION

Copyright 2024 ZTE CORPORATION.

The contents of this document are protected by copyright laws and international treaties. Any reproduction or distribution of this document or any portion of this document, in any form by any means, without the prior written consent of ZTE CORPORATION is prohibited. Additionally, the contents of this document are protected by contractual confidentiality obligations.

All company, brand and product names are trade or service marks, or registered trade or service marks, of ZTE CORPORATION or of their respective owners.

This document is provided as is, and all express, implied, or statutory warranties, representations or conditions are disclaimed, including without limitation any implied warranty of merchantability, fitness for a particular purpose, title or non-infringement. ZTE CORPORATION and its licensors shall not be liable for damages resulting from the use of or reliance on the information contained herein.

ZTE CORPORATION or its licensors may have current or pending intellectual property rights or applications covering the subject matter of this document. Except as expressly provided in any written license between ZTE CORPORATION and its licensee, the user of this document shall not acquire any license to the subject matter herein.

ZTE CORPORATION reserves the right to upgrade or make technical change to this product without further notice.

Users may visit the ZTE technical support website http://support.zte.com.cn to inquire for related information.

The ultimate right to interpret this product resides in ZTE CORPORATION.

Statement on the Use of Third-Party Embedded Software:

If third-party embedded software such as Oracle, Sybase/SAP, Veritas, Microsoft, VMware, and Redhat is delivered together with this product of ZTE, the embedded software must be used as only a component of this product. If this product is discarded, the licenses for the embedded software must be void either and must not be transferred. ZTE will provide technical support for the embedded software of this product.

Revision History

Revision No.	Revision Date	Revision Reason
R1.0	2024-01-25	First edition.

Serial Number: SJ-20240126105308-001

Publishing Date: 2024-01-25 (R1.0)

Contents

1 Safety Precautions and Disclaimers..... 1
2 Product Overview..... 4
2.1 Product Role..... 4
2.2 Product Characteristics..... 4
3 Application Scenarios..... 5
4 Hardware Architecture..... 6
4.1 Dimensions..... 6
4.2 Panel Components..... 6
4.3 Status Display..... 8
5 Installation..... 10
5.1 Installation Requirements..... 10
5.2 Tool Preparations..... 11
5.3 Installing Lithium-Ion Batteries and Devices Capable of RS485 Communication..... 11
6 Replacing a Battery..... 18
7 Operation and Maintenance..... 20
7.1 Commissioning Parameters..... 20
7.1.1 Setting Parameters for the Power Supply that Can Communicate with the ZXESM R351 Batteries..... 20
7.1.2 Parameter Settings of a Third-Party Power Supply..... 20
7.2 Battery Power-On..... 21
7.3 Battery Maintenance Mode..... 23
7.4 Battery Power-Off..... 23
7.5 Parallel Connection..... 24
7.6 (Optional) Heating Function..... 24
7.7 System Maintenance..... 25
7.8 Transportation and Storage..... 27
7.8.1 Requirements for Transportation and Storage..... 27
7.8.2 Storage and Maintenance at High and Low temperatures..... 28
7.9 Battery Recharge Requirements..... 28
7.9.1 Recharge Prerequisites..... 28
7.9.2 Battery Status Check..... 29
7.9.3 Recharge Method..... 29
7.9.4 Post-Recharge Actions..... 30

8 Protection Functions and Parameters..... 31
9 Troubleshooting..... 33
10 Discharge Curves.....41
11 Technical Specifications..... 42
Glossary.....44

About This Manual

Purpose

This manual is applicable to the ZXESM R351 lithium-ion battery system. It provides information about the structure, performance, and application of the product.

Intended Audience

This manual is intended for:

- Hardware installation engineers
- Maintenance engineers

What Is in This Manual

This manual contains the following chapters.

Chapter 1, Safety Precautions and Disclaimers	Describes the safety precautions that need to be taken during the installation, use, and storage of the ZXESM R351.
Chapter 2, Product Overview	Describes the application and characteristics of the ZXESM R351.
Chapter 3, Application Scenarios	Describes the application scenarios of the ZXESM R351.
Chapter 4, Hardware Architecture	Describes the dimensions and panel components of the ZXESM R351.
Chapter 5, Installation	Describes how to install the ZXESM R351 and connect the cables.
Chapter 6, Replacing a Battery	Describes how to replace the ZXESM R351.
Chapter 7, Operation and Maintenance	Describes how to operate and maintain the ZXESM R351.
Chapter 8, Protection Functions and Parameters	Describes the protection functions and parameters of the ZXESM R351.
Chapter 9, Troubleshooting	Describes the common troubleshooting process and special troubleshooting process.
Chapter 10, Discharge Curves	Describes the discharge curves in various application scenarios.
Chapter 11, Technical Specifications	Describes the technical specifications of the ZXESM R351.

Related Documentation

The following documentation is related to this manual:

ZXESM R351 (V1.0) Lithium-Ion Battery Quick Installation Guide

Conventions

This manual uses the following conventions.

Italics	Variables in commands. It may also refer to other related manuals and documents.
Bold	Menus, menu options, function names, input fields, option button names, check boxes, drop-down lists, dialog box names, window names, parameters, and commands.
`Constant width`	Text that you type, program codes, filenames, directory names, and function names.
[ ]	Optional parameters.
{ }	Mandatory parameters.
|	Separates individual parameters in a series of parameters.
	Danger: indicates an imminently hazardous situation. Failure to comply will result in death or serious personal injury.
	Warning: indicates a potentially hazardous situation. Failure to comply can result in death or serious personal injury.
	Caution: indicates a potentially hazardous situation. Failure to comply can result in moderate or minor personal injury.
	Notice: indicates equipment or environment safety information. Failure to comply can result in equipment damage, data loss, equipment performance degradation, environmental contamination, or other unpredictable results.
	Note: provides additional information about a topic.

Chapter 1
Safety Precautions and Disclaimers

Safety Precautions

You must read the safety precautions carefully before any operations, and keep the user manual properly. You must read local safety specifications and operation regulations carefully. The safety precautions in this manual are supplementary to local safety specifications.
For safety precautions, refer to Table 1-1.

Table 1-1 Safety Precautions

Class	Safety Precaution
 **Installation**	● Do not install batteries near heat sources or devices such as heaters and stoves. ● Do not install batteries on the direct ventilation cabinet within 14 km offshore. ● Do not expose the battery to moisture in any form, including condensation, water drips, rain, or submersion. ● Do not wear metallic articles, such as a watch, a bracelet, or a ring. ● Use tools with insulating handles. Never place tools or metal objects on batteries. ● Before installing a battery, disconnect the circuit breaker or fuse between the battery and the power system. ● When installing a battery, ensure that sufficient safety distances are kept around the battery to ensure ventilation. ● When installing a battery, ensure that the positive and negative terminals are connected correctly. ● Do not use a metal object, for example, a wire, to directly connect the positive and negative terminals. A short circuit may result in an electric shock or a fire.
 **Storage**	● Do not hit batteries, for example, puncture them with needles, hammer them, or trample them. ● Do not store batteries in a high-temperature environment, for example, do not throw batteries into fire, and do not heat batteries.

Class	Safety Precaution
	● Do not expose the battery to moisture in any form, including condensation, water drips, rain, or submersion. ● Do not disassemble batteries or change their structures without permission.
**Charging and Discharging**	● Do not use unqualified devices to charge or discharge batteries. Follow correct operation instructions. ● Do not charge or discharge hot batteries, deformed batteries, or batteries with leakage. ● Charge batteries promptly if they are short of electric charges.
**Use**	● Do not expose the battery to moisture in any form, including condensation, water drips, rain, or submersion. ● Do not connect any power supply or load that does not meet power level requirements to battery ends. ● Because batteries are prone to shock hazards and short-circuit current dangers, battery maintenance and replacement must be carried out by personnel with professional battery knowledge. ● In case of fire, use dry powder fire extinguishers. The use of a liquid fire extinguisher may result in electric shock hazards.

Disclaimers

To transport, store, and use the battery system, you must comply with this manual. In the following cases, the warranty becomes void:

In the following scenarios, you must charge the batteries before using them. Otherwise, the damage to the batteries is not included in the warranty scope.

- After long-term transportation or storage, batteries are not recharged in accordance with the requirements specified in section "7.9 Battery Recharge Requirements".
- After long-term transportation or storage, batteries in out of service or backup status are not recharged in accordance with the requirements specified in section "7.9 Battery Recharge Requirements".
- When batteries are discharged and in the under-voltage protection status for more than 7 days, the batteries are not recharged in accordance with the requirements specified in section "7.9 Battery Recharge Requirements".

The following requirements must be met during battery use. Otherwise, the damage to the batteries is not included in the warranty scope.

- Charging and discharging parameters of batteries must be within a reasonable range. Overloading is prohibited.
- The ambient temperature of batteries must be within a reasonable range. Do not use batteries in an overheated or overcooled environment.

- The electrical grid where batteries are used must meet requirements. Warranty periods vary with different electrical grid environments. If batteries are not used in the committed grid environment, the warranty period becomes void.
- Water enters the device due to improper battery use or maintenance. These are not covered by free warranty.
- Batteries are exposed to rain, water, sun, fire, or impact; the battery drops, causing visible deformation of the case, or the battery case is pierced by external objects. These are not covered by free warranty.
- Batteries are used in environments with high salt fog, corrosion, and pollution. These are not covered by free warranty.
- Faults or damage caused by natural disasters (for example, an earthquake, a lightning strike, a fire, and a flood) or force majeure (for example, a war) are not included in the warranty scope.

Chapter 2
Product Overview

Table of Contents

Product Role....4
Product Characteristics....4

2.1 Product Role

The lithium-ion battery is an integrated system for backup or cycling scenarios. It can provide –48 V DC power for communication devices, such as access network devices, remote central office devices, mobile communication devices, transmission devices, and satellite ground stations. The ZXESM R351 is a multi-functional, 100 Ah lithium-ion battery, which can be configured with a heating function for low-temperature scenarios.

2.2 Product Characteristics

The ZXESM R351 lithium-ion battery system is an integrated lithium-ion unit composed of the battery cells, BMS, and structural components.

The ZXESM R351 lithium-ion battery has the following characteristics:

- Supports the embedded installation mode.
- Supports installation together with other devices in the same 19-inch rack or cabinet to save space.
- Supports parallel operation of multiple lithium-ion batteries to implement modular capacity expansion.

Chapter 3
Application Scenarios

The ZXESM R351 lithium-ion battery can be used as a power supply for telecommunication base stations. Figure 3-1 shows an application scenario where a ZTE-developed CSU is used as an example.

Figure 3-1 ZXESM R351 Lithium-Ion Battery Application Scenario

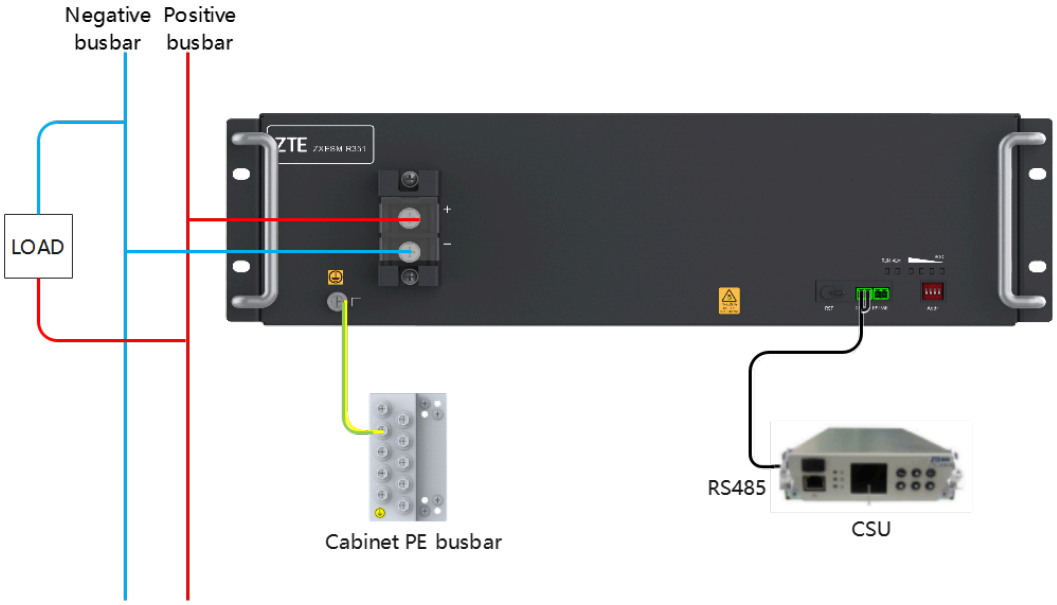

Chapter 4
Hardware Architecture

Table of Contents

Dimensions.....6
Panel Components.....6
Status Display.....8

4.1 Dimensions

The Dimensions (H × W × D) of the ZXESM R351 lithium-ion battery:

- ≤130.5 mm × 483 mm × 400 mm (including handles and flanges, excluding connectors.)
- ≤130.5 mm × 442 mm × 400 mm (including handles and flanges)

Figure 4-1 shows the external view and dimensions of a ZXESM R351 lithium-ion battery.

Figure 4-1 External View and Dimensions

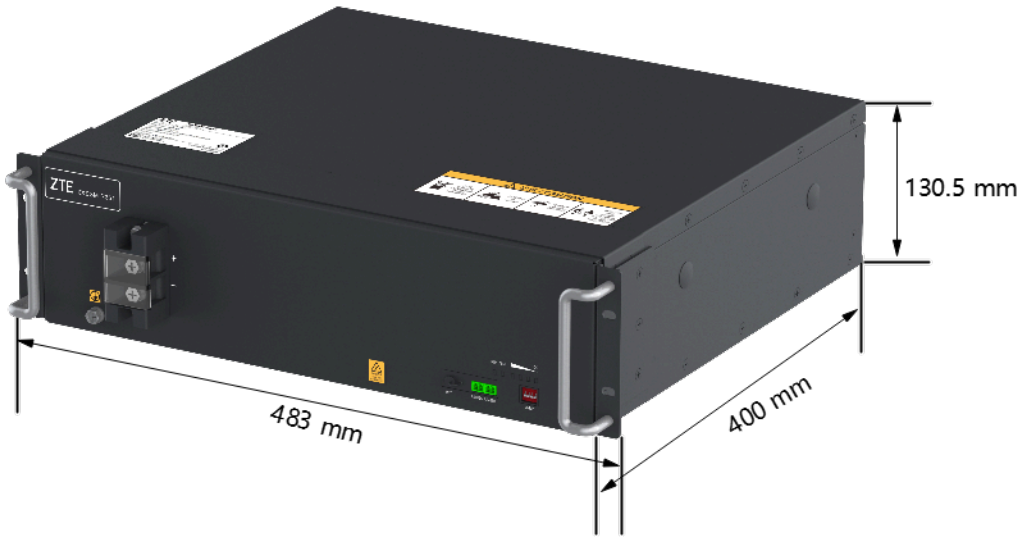

4.2 Panel Components

Figure 4-2 shows the panel components of the ZXESM R351 lithium-ion battery.

Figure 4-2 Panel Components

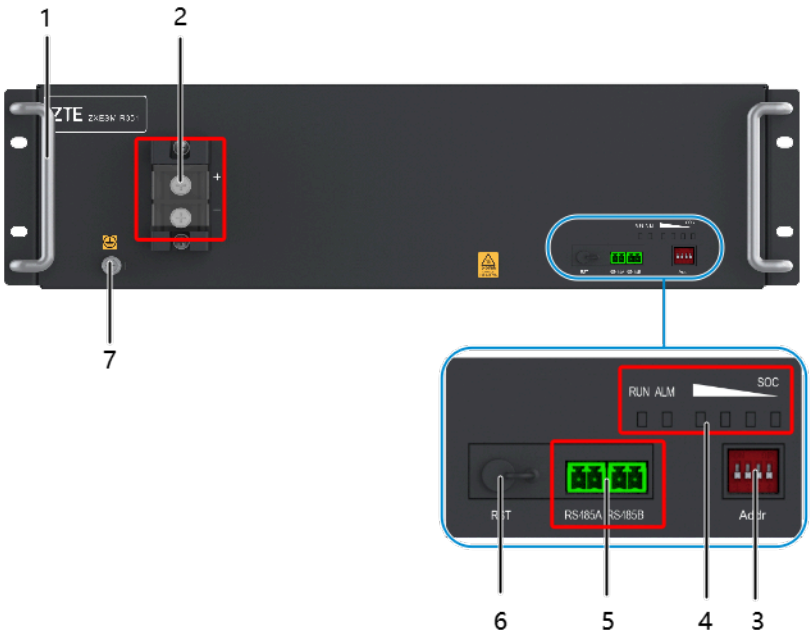

1. Handle
2. Battery connection terminal
3. DIP switches
4. Status indicators
5. RS485 communication interfaces
6. RST button
7. Grounding terminal

For a description of the components on the ZXESM R351 lithium-ion battery panel, refer to Table 4-1.

Table 4-1 Panel Component Descriptions

No.	Component Name	Description
1	Handle	Used to carry the battery.
2	Battery connection terminal	● +: used for connecting the positive pole of the battery. ● –: used for connecting the negative pole of the battery.
3	DIP switches	Used for setting the device address. ● When all switches are set to OFF, the address is 1. ● When DIP switch 1 is set to ON, the address is incremented by 1. ● When DIP switch 2 is set to ON, the address is incremented by 2. ● When DIP switch 3 is set to ON, the address is incremented by 4. ● When DIP switch 4 is set to ON, the address is incremented by 8. Note: DIP switches 1 through 4 are positioned from left to right. After you change the device address by using the DIP switches, the device needs to be restarted for the change to take effect.

No.	Component Name	Description
4	Status indicators	Indicate the battery status: ● In power-off mode, press the RST button to power on the battery and enter working mode. ● In working mode, press and hold the RST button for 3 seconds. The alarm and battery level indicators are turned off, and the RUN indicator starts blinking (on for 0.25 seconds, and then off for 1.75 seconds), indicating that the battery has entered maintenance mode. If the RST button is not released within 8 seconds, the RUN indicator returns to normal working mode. ● In maintenance mode, press and hold the RST button for 3 seconds. All LED indicators are turned off, and the lithium-ion battery enters power-off mode. If the RST button is not released within 8 seconds, the LED indicators return to maintenance mode.
5	RS485 communication interfaces	Used for RS485 communication.
6	RST button	Used to power on or off the battery.
7	Grounding terminal	Used for grounding protection.

4.3 Status Display

There are six LED indicators on the front panel of the ZXESM R351 lithium-ion battery system. These indicators show the operating status of the ZXESM R351 lithium-ion battery system. Figure 4-3 shows the indicators.

Figure 4-3 Indicators

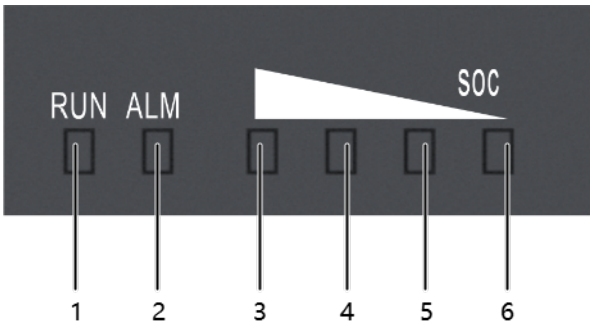

1. Operation indicator
2. Alarm indicator
3. SOC indicator LED4
4. SOC indicator LED3
5. SOC indicator LED2
6. SOC indicator LED1

Note

There are five different states of an LED indicator:

- Off.
- Solid on.
- Flashing slowly: on for 1 s and off for 1 s.
- Flashing quickly: on for 0.25 s and off for 0.25 s.
- Blinking: on for 0.25 s and off for 1.75 s.

For a description of the indicator status in different modes, refer to Table 4-2.

Table 4-2 Description of the Indicator Status in Different Modes

Status	RUN	ALM	SOC (LED1–4)				Description
Powered off	Off	Off	Off	Off	Off	Off	The battery is powered off or about to be powered off.
Sleeping	Blinking	Off	Off	Off	Off	Off	The battery enters maintenance mode.
Charging	Solid on	• Off when there is no alarm. • Flashing slowly when there is any alarm.	The indicator status depends on the SOC. During charging, when the SOC is at the highest level, LED4 flashes quickly.				-
Discharging	Flashing quickly						-
Failed	Flashing slowly	Solid on					The battery is permanently damaged. It cannot discharge or be charged.
Locked	Flashing slowly	Flashing quickly					-

Chapter 5
Installation

Table of Contents

Installation Requirements..... 10
Tool Preparations..... 11
Installing Lithium-Ion Batteries and Devices Capable of RS485 Communication..... 11

5.1 Installation Requirements

Installation environment check and requirements

- The battery must be installed far away from heat sources. Cannot be installed near heat sources. (For example, near electric heating stoves, hot stoves, and other similar devices.)
- To install batteries, you need to identify the waterproof scenario of the installation environment. Including but not limited to the following three waterproof scenarios.

Waterproof Scenarios and Precautions

- Outdoor lifting installation scenario:
  - → Protect the battery during unpacking. Avoid battery water ingress due to rain or water on the site.
  - → Do not place the battery directly on the ground. Put a carton under the battery first. Prevent dust and water from entering the battery.
  - → Protect batteries during lifting installation. (Hoisting the battery together with the packing bag.) Avoid rain water during installation.
  - → Fasten the two handles of the battery during lifting installation. Do not fasten only one handle of the battery. During the hoisting process, verify that both sides of the battery are balanced. Do not turn over the battery, and prevent the battery from falling from a high place.
- Outdoor cabinet installation scenario:
  - → The door of an outdoor cabinet must be closed reliably after installation.
  - → Ensure that there is no possibility of water ingress at the ventilation outlet of the outdoor cabinet.
  - → Ensure that the air conditioner water of the cabinet is not dropped on the battery.
  - → Do not install or place batteries at the bottom of the cabinet where water may accumulate.

→ Ensure that the cables (for example, optical fibers) that enter the cabinet from the outside are blocked properly to prevent water from entering the cabinet along the cables. Prevent external rain water from dripping onto the battery along the cables.

- Indoor installation scenario:
  → Do not install the battery near the window. (Ventilation windows or feeder windows etc.) Prevents rain water from flowing into the battery through the window.
  → Do not install batteries directly under the entrance cable of the cable tray. Prevent external rain water from flowing into the room along the cable and dropping onto the battery.
  → Do not install or place batteries on a ground where water may accumulate.

5.2 Tool Preparations

The tools that should be prepared before installation, refer to Table 5-1.

Table 5-1 Tools Required for Device Installation

Image & Name	Image & Name	Image & Name	Image & Name
Socket wrench 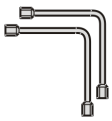	Crosshead screwdriver 	Flat head screwdriver 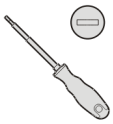	Torque wrench 
Diagonal pliers 	Crimping pliers 	Hydraulic pliers 	Wire stripper 
Insulating tape 	Thimble 	Protective gloves 	Heat shrink tubing 

5.3 Installing Lithium-Ion Batteries and Devices Capable of RS485 Communication

Abstract

Devices that can communicate with the ZXESM R351 through RS485 include FSUs, ZTE-developed fifth and sixth generations of power supplies, and ZTE-developed SCUs for site monitoring. In this section, the ZTE-developed sixth generation of power supply is used as an example.

Context

Before installation, perform the following checks:

- Verify that there is no dent or damage on the battery, and that the accessories are complete. If there is any visible damage, do not install the battery, and contact ZTE technical support.
- Before installing the battery, power on the device to verify that there is no abnormal alarm. After the check is completed, press and hold the RST button for 5 seconds to enter maintenance mode.
- The length of the ZXESM R351 is 400 mm. Before installation, ensure that the cabinet can accommodate the ZXESM R351.
- It is recommended that a cabling space of 70 mm be reserved at the side of the cabinet to accommodate the bending radius of the network cable.

Steps

1. Install the battery.
   a. Secure the flanges.
   b. Two persons carry the lithium-ion battery into its installation position.
   c. Use four M5 self-tapping screws to fasten the lithium-ion battery on the rack with a torque of 5 N·m, see Figure 5-1.

Figure 5-1 Parallel Installation



2. Connect the grounding terminals of the batteries to the PE busbar of the power rack.
   a. One end of the grounding cable (round M6 terminal) is connected to the grounding terminal at the lower left corner of the battery, tightening torque 5 N·m. The other end is connected to the PE busbar, see Figure 5-2.

Figure 5-2 Grounding for Parallel Installation

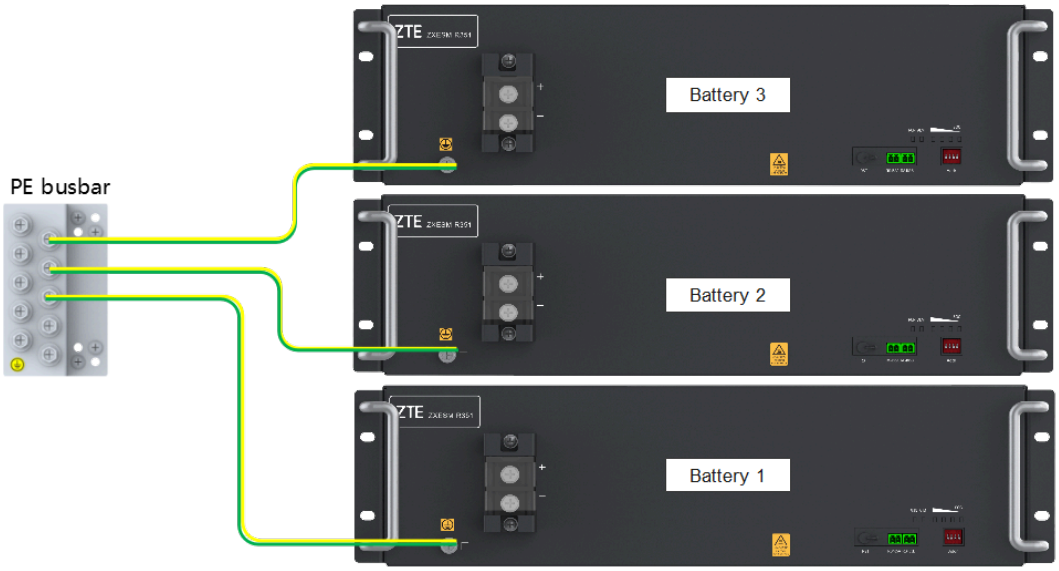

3. Connect communication cables for cascading batteries (using the cascading of three batteries as an example).
   a. Take out two battery communication cables. Insert one end of the first battery communication cable into the RS485A interface of Battery 3, and insert the other end into the RS485B interface of Battery 2.
   b. Connect the cascading cables between Battery 2 and Battery 1 by referring to Step a.
   c. Insert the RS485 communication cable into the RS485A interface at the bottom of Battery 1. Figure 5-3 shows the connections of communication cables between batteries.

Figure 5-3 Communication Cable Connections Between the Batteries

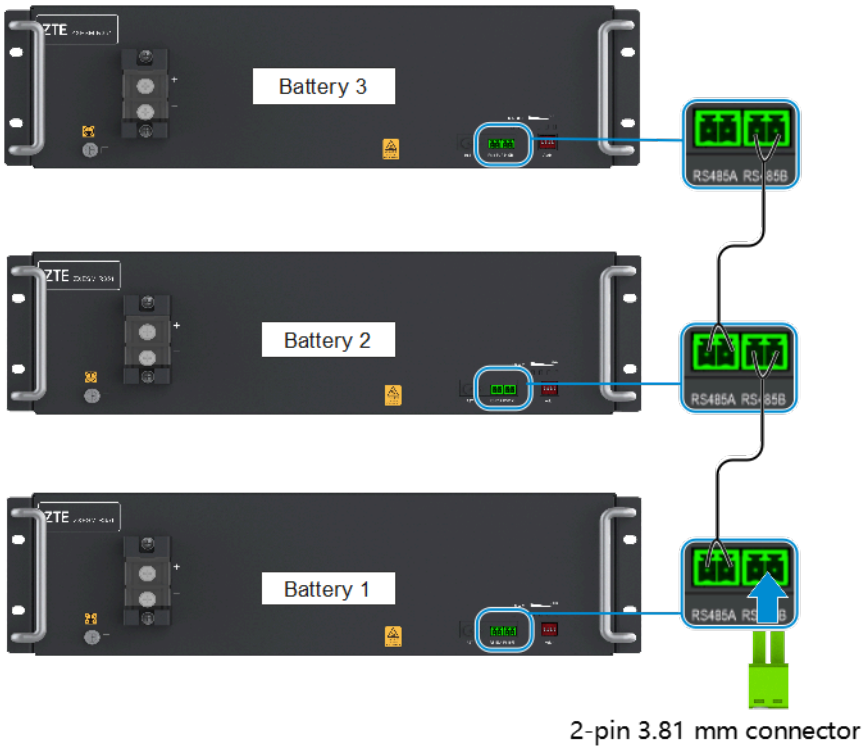

d. Connect the RS485 communication cable between the battery and the ZTE-developed power supply.

   Insert the 2-pin 3.81 mm connector of the cable into the RS485B interface of Battery 3, see Figure 5-4.

Note

The procedure on RS485 communication cable connection is applicable to the FSUs that can communicate with the ZXESM R351, the fifth-generation and sixth-generation CSUs developed by ZTE, and site monitoring SCUs developed by ZTE. The following uses the sixth-generation power supply developed by ZTE as an example.

Figure 5-4 RS485 Communication Cable Connections Between the Power System and the Batteries

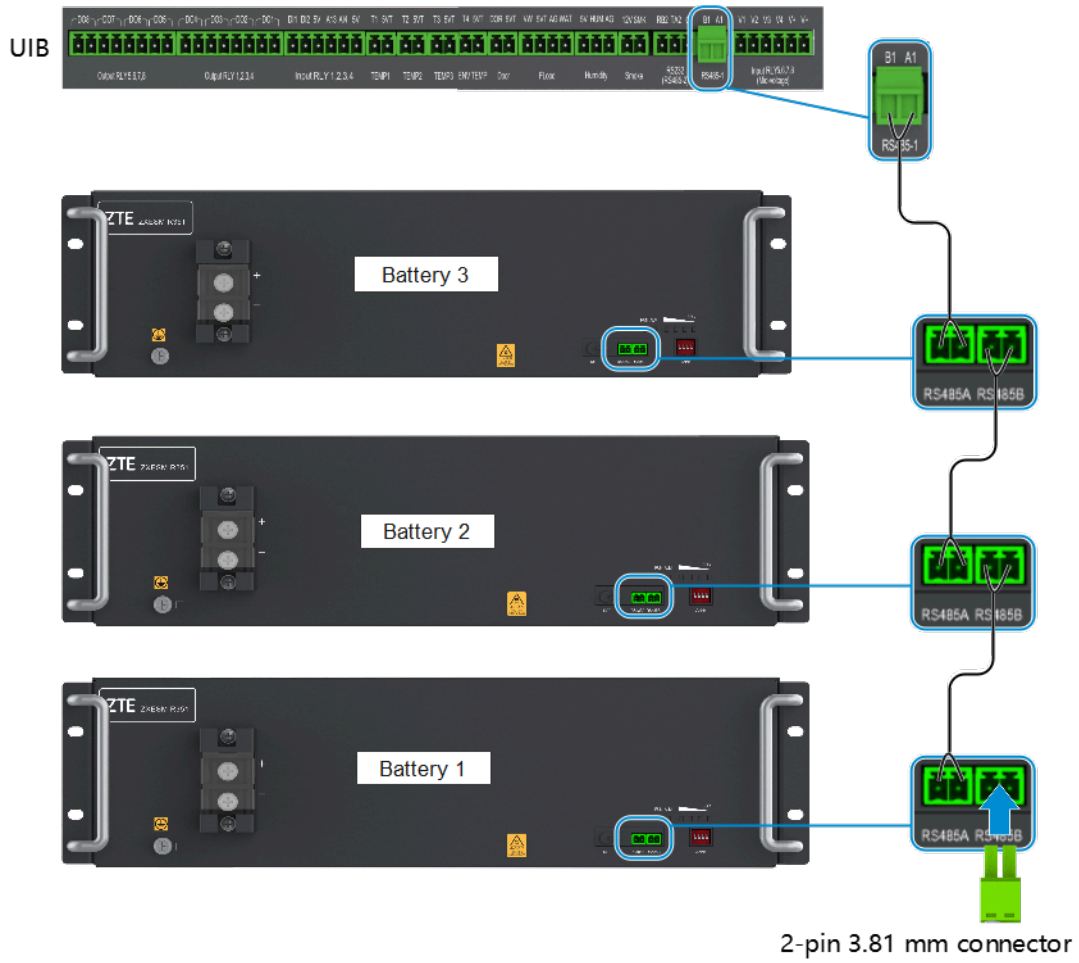

4. Connect the power cables.
   a. Remove the protective covers of the power ports. Connect one end (which is not the M6 terminal) of the positive power cable of each battery to a positive terminal of the DC power busbar, and secure the other end (M6 terminal) of the same cable to the positive terminal of a battery.
   b. Connect the M6 terminal of the negative power cable of each lithium-ion battery to the negative terminal of the battery, and the other end of the negative power cable to the circuit breaker for the lithium-ion battery. After that, install the protective cover of the power port with a screwdriver. Figure 5-5 shows the power cable connection.

Figure 5-5 Power Cable Connection Diagram

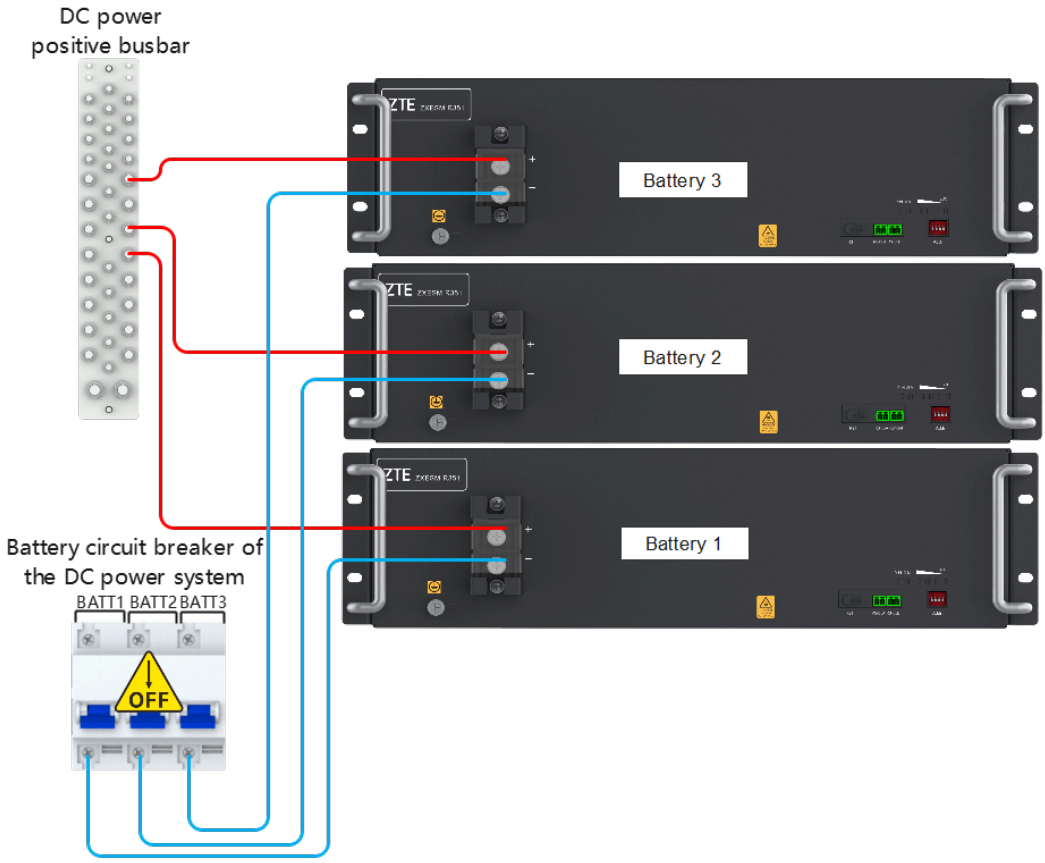

5. Connect batteries in parallel connection.
   a. If multiple batteries are installed in parallel connection, they must be connected to the power system or PE busbar through power cables of equal length. Do not connect batteries in cascading connection. For how to connect batteries in parallel connection, see Figure 5-6.

Figure 5-6 Connecting Batteries in Parallel Connection

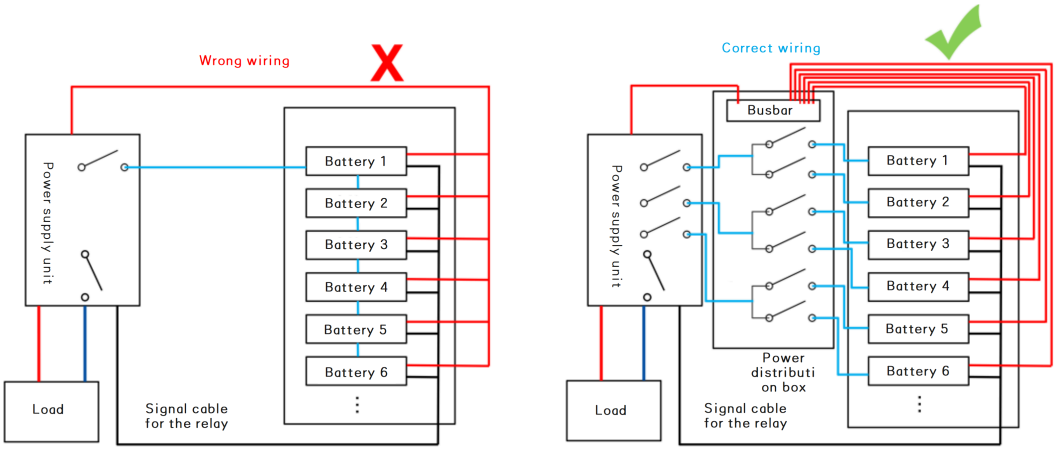

Notice

- The ZXESM R351 weighs approximately 43 kg and needs to be installed by two people.
- If multiple batteries are involved, install them in the cabinet in bottom-up mode.
- During installation, reserve at least a 1U heat dissipation space for each battery. Do not directly stack batteries.
- Before installation, power on the battery and verify that it is operating properly. After the check, verify that the battery is in sleep or power-off state.
- If multiple batteries are installed in parallel connection, they must be connected to the power system or PE busbar through power cables of equal length. Do not connect batteries in cascading connection. For how to connect batteries in parallel connection, see Figure 5-6.
- The cable for connecting batteries in different cabinets in parallel connection must be an outdoor shielded twisted-pair cable, and the diameter of the solid conductor must be no less than 0.2 mm.
- If there are more than two batteries in parallel connection, the first battery and the last battery need to be connected to the RJ45 matching resistors.

Note

For a description of the installation of the lithium-ion batteries, refer to 5.3 Installing Lithium-Ion Batteries and Devices Capable of RS485 Communication. For how to power on and set the parameters of the lithium-ion battery, refer to 7 Operation and Maintenance.

Chapter 6
Replacing a Battery

Abstract

When a battery is faulty or damaged, it needs to be replaced. This procedure describes how to replace the ZXESM R351 lithium-ion battery and how to power it on after replacement.

Prerequisites

Before battery replacement, the following items are ready:

- Tools and materials: torque wrench, crosshead screwdriver, protective gloves, insulation tape, and cabinet door key.
- A new ZXESM R351 lithium-ion battery.

Configuration Steps

1. Check the status of the battery in use:
   - If the battery is operating, press and hold its RST button for 5 seconds to enter maintenance mode, and make a note of the cable connections to the battery.
   - If it is damaged and cannot operate properly, make a note of the cable connections to the battery.
2. Remove the battery in use.
   a. Wear protective gloves, and ensure that the circuit breakers of the positive and negative busbars of the battery are in the OFF position.
   b. Disconnect the external cables from the battery in use. After they are disconnected, insulate the cables and mark their positive and negative terminals for distinction.
   c. Use a torque wrench to loosen the fastening screws on the panel and remove the battery.
3. Install a new battery.
   a. Before installing the new battery, power it on and put it in maintenance mode by pressing and holding the RST button for 5 seconds.
   b. Install the new battery and tighten the screws.
   c. Connect the cables to the new battery in the correct order in accordance with the positive and negative markings.

d. Put the battery in working mode (refer to "7.2 Battery Power-On" for specific instructions).
e. Remove the protective gloves, and put away the tools and materials.
f. Package the removed battery and its components, and return them to a local repair center.

Chapter 7
Operation and Maintenance

Table of Contents

Commissioning Parameters..... 20
Battery Power-On..... 21
Battery Maintenance Mode..... 23
Battery Power-Off..... 23
Parallel Connection..... 24
(Optional) Heating Function..... 24
System Maintenance..... 25
Transportation and Storage..... 27
Battery Recharge Requirements..... 28

7.1 Commissioning Parameters

7.1.1 Setting Parameters for the Power Supply that Can Communicate with the ZXESM R351 Batteries

The ZXESM R351 batteries support communication with the fifth and sixth generations of ZTE power supplies. By default, the performance parameters of the batteries are configured and you can keep the default settings. The parameters of the power supplies can be set as required. For the setting method, refer to the corresponding power supplies operation guide.

7.1.2 Parameter Settings of a Third-Party Power Supply

A power supply that cannot communicate with a ZXESM R351 lithium-ion battery is called a third-party power supply.

If the ZXESM R351 lithium-ion batteries serve as a backup for a third-party power supply, set the circuit breakers of the batteries to the OFF position. Turn on the third-party power supply and configure the parameters of the third-party power supply by referring to Table 7-1.

Table 7-1 Parameter Settings of a Third-Party Power Supply

Parameter	Recommended Value	Recommended Range
Equalized charge voltage	52.5 V	52.5 V–54.5 V
Float charge voltage	52.5 V	52.5 V–54.5V
LLVD1 voltage	47 V	45 V–48 V
LLVD2 voltage	46 V	44 V–47.3 V
Charge current	0.3 C	0–0.8 C
Battery 1 capacity	n × battery capacity (n is the number of batteries connected to circuit breaker 1)	-
Battery 2 capacity	n × battery capacity (n is the number of batteries connected to circuit breaker 2)	-
Battery 3 capacity	n × battery capacity (n is the number of batteries connected to circuit breaker 3)	-
Battery 4 capacity	n × battery capacity (n is the number of batteries connected to circuit breaker 4)	-
Voltage temperature coefficient	0	-

7.2 Battery Power-On

Abstract

This procedure describes how to check the ZXESM R351 before power-on and how to power it on.

There are two ways to power on the ZXESM R351:

- Power-on: Used for commissioning a new site.
- Manual Power-on: Used for site capacity expansion, commissioning of a new site, and test office.

Notice

- If there is no AC input for the power supply device, do not close the circuit breaker when the battery is powered on.
- If multiple battery packs are connected in parallel connection, check the parallel connection diagram with ZTE technical support. Do not connect them in parallel connection beyond the maximum specifications of battery terminals.

Steps

1. Check before power-on.
   a. Verify that batteries are installed properly and all screws are fastened.
   b. Verify that all power cables are connected correctly and securely without reverse polarity or short circuit.
   c. Verify that communication cables are connected correctly and securely.
   d. Check whether there are screw holes where screws are not installed. If yes, install the screws into the holes.
2. Power-on.
   - Power on through activation.

     During the commissioning of the ZXESM R351 on a new site, lithium-ion batteries can be activated through external power-on. The battery does not need to be powered on by pressing the ON/OFF button. The activation voltage must be greater than 35 V.

     a. Ensure that batteries are installed properly, that the AC circuit breaker is open, and that all the batteries are powered off.
     b. Close the circuit breakers of all the batteries.
     c. After starting the AC power supply, the rectifier is operating properly, and all the batteries are activated.
     d. After verifying that the battery can be charged properly, insert rectifier modules into the power system.
   - Power on manually.

     Notice

     Do not connect battery circuit breakers directly to the positive or negative busbar when the battery is powered on.

     a. Verify that batteries and cables are installed properly, and that all the circuit breakers for the battery are open.
     b. Close a battery circuit breaker and power on the corresponding battery.
     c. Repeat Step b until all the batteries are powered on.

7.3 Battery Maintenance Mode

Abstract

When the ZXESM R351 lithium-ion battery does not need to be used or needs to be stored for a long time, you should put the battery to maintenance or power off the battery to reduce its own power consumption.

When moving or carrying the ZXESM R351, or connecting cables, enable maintenance mode. After maintenance mode is enabled, the battery cannot be charged or discharged. The on-site engineers can safely operate the battery.

This chapter describes how to enter maintenance mode.

Context

After maintenance mode is enabled, the ZXESM R351 supports communication, data acquisition, and the handling of monitoring instructions from the CSU.

Steps

In working mode, press and hold the RST button for 3 seconds. The alarm and battery level indicators are turned off, and the RUN indicator starts blinking (on for 0.25 seconds, and then off for 1.75 seconds), indicating that the battery has entered maintenance mode.

7.4 Battery Power-Off

Abstract

When the ZXESM R351 lithium-ion battery does not need to be used or needs to be stored for a long time, you should put the battery to maintenance or power off the battery to reduce its own power consumption. This chapter describes how to power off the battery.

Steps

1. In working mode, press and hold the RST button for 3 seconds. The alarm and battery level indicators are turned off, and the RUN indicator starts blinking (on for 0.25 seconds, and then off for 1.75 seconds), indicating that the battery has entered maintenance mode.
2. In maintenance mode, press and hold the RST button for 3 seconds. All LED indicators are turned off, and the lithium-ion battery enters power-off mode. If the RST button is not released within 8 seconds, the LED indicators return to maintenance mode.

7.5 Parallel Connection

The discharge current of a single battery should not be greater than 1.0 C. If multiple groups of batteries are connected in parallel, the discharge current should not be greater than the total battery capacity multiplied by 0.8 C.

A single lithium-ion battery in parallel connection is 4.8 kW. For a description of the maximum discharge power of multiple batteries in parallel connection, refer to Table 7-2.

The derating requirements for parallel connection are as follows (the maximum output power of parallel connection is 24 kW):

Table 7-2 Maximum Output Powers in Different Parallel Connection Scenarios

Number of Connected Batteries	Derating Coefficient
2	0.70
3	0.60
4	0.55
5	0.50
6	0.50
7	0.45
8/9/10/11/12/13/14/15/16	0.40

If the battery is discharged to a low power capacity, an alarm is reported. If the battery is continually discharged to a low-voltage protection value, battery discharging stops to protect the battery. If external power supply is detectedd, the battery is restored and starts charging.

7.6 (Optional) Heating Function

You can configure the heating function for the ZXESM R351 lithium-ion battery so that the battery can operate normally even in low-temperature environments.

A heating film is used for the heating function, which is enabled in either of the following ways:

- Manual: You control battery operation through the BMS and manually enable heating on the battery.
- Automatic: The ZXESM R351 lithium-ion battery can start heating automatically for a short period of time without any command given to it. Automatic heating starts when the battery cell temperature is lower than a user-defined threshold. This ensures the power supply of the battery is normal.

If the heating function cannot be enabled properly, the possible reasons are as follows:

- The cell temperature sensor is faulty.
- The battery is locked.

- The heating film is faulty.
- No heating film is configured on the battery.

7.7 System Maintenance

Notice

O&M Precautions:

- Do not let rain water enter the cabinet during outdoor cabinet maintenance in rainy days.
- After an outdoor cabinet is maintained, the cabinet door must be closed.
- After an indoor cabinet is maintained, the doors and windows of the site must be closed.

Due to environment influence (such as the temperature, humidity, dust, and electromagnetic interference), and aging and wearing of internal components, the fault ratio of the device will increase. To reduce the fault ratio and extend the lifespan of the device, daily maintenance should be performed.

For the maintenance items for the ZXESM R351 lithium-ion battery, refer to Table 7-3.

Table 7-3 Routine Maintenance Items

Maintenance Period	Check Item	Check Method	Handling Method	Requirements
Monthly	External view	• Observe the external view of a battery to verify that there is no bulge or leakage. • Verify that the power cable of the battery is not squeezed or deformed, and has no loose or peeled cable sheath.	Take a photo and replace the battery or cable.	Required
	Operating environment	Maintain a proper ambient temperature and a good installation environment, avoid direct light or other radiation for a long period of time, and prevent water, other liquids, dust and dirt from entering.	Remove dust, dehumidify, and clean the battery.	Required
	Open-circuit voltage measurement	Set the battery air circuit breaker of the power system, and use a multimeter to measure the open-circuit voltage of the battery. The battery voltage is required to be greater than 45 V. If the measured open-circuit voltage is below 45 V, the battery is possibly disconnected from the system due to	Charge the battery by referring to 7.9.3 Recharge Method.	Optional

Maintenance Period	Check Item	Check Method	Handling Method	Requirements
		discharge protection and needs to be charged for recovery.		
	Whether the air circuit breaker of the corresponding battery is tripped	Set the air circuit breaker of the battery to the ON position.	-	Required
	Communication status check (not required if no communication is involved)	● Check the real-time battery information through the CSU or the site monitoring system. ● Check whether the RS485 communication cable is correctly connected in accordance with the wire sequence.	Connect the cable properly.	Required
Quarterly	Troubleshooting in accordance with the fault information	Export real-time and historical battery alarms and protection information through the communication of the power system or the BMS software of the battery system.	Handle a fault in a timely manner by referring to the alarm table in the user manual and the corresponding handling methods.	Required
	BMS status check	Set the battery air circuit breaker on the power system to the OFF position, and press and hold the ON/OFF button for a long time to shut down the BMS.	If there is output voltage between the positive and negative poles, the BMS may be damaged and cannot be shut down. Replace the BMS.	Optional
	Whether the charging and discharging parameters of the power system meet requirements	Verify that the charging voltage, charging current, and power-off voltage meet the requirements.	Correct the setting in accordance with the user manual.	Required
	Cable and connection check	● Check whether all connectors and terminals are secured properly.	● Secure a cable if it is loose.	Required

Maintenance Period	Check Item	Check Method	Handling Method	Requirements
		● Check whether all cables are free of abrasion.	● Replace a cable if it is abraded.	
Once every half year	Battery charging and discharging test	Use the power system to perform a charging and discharging test. After the battery is fully charged, discharge the battery. The battery backup time must meet the requirements.	If no, charge the battery for recovery. Further check the cell consistency.	Optional
	Cell consistency check	During the charging and discharging test, connect the BMS software of the battery or use the CSU to obtain the battery cell voltage near the end of battery charging and discharging. Verify that no cell consistency alarm is raised.	For the battery with poor cell consistency at the end of charging, you can reduce the charging voltage and use the 0.05 C low current for long-term charging and recovery.	Optional

Note

Except on special occasions, the ZXESM R351 lithium-ion battery system cannot be disassembled on site. If a fault occurs, perform maintenance in accordance with the methods described in 9 Troubleshooting. If the fault persists, contact ZTE technical support.

7.8 Transportation and Storage

7.8.1 Requirements for Transportation and Storage

For the battery transportation and storage conditions, refer to Table 7-4.

Table 7-4 Transportation and Storage Conditions

Transportation and Storage Scenario	Specification
Storage temperature (long-term)	0 °C through +40 °C (20 °C through 30 °C is recommended)
Transportation temperature (short-term)	–40 °C through +60 °C
Storage humidity	5% through 95% (40 °C, no condensation)
Altitude	0 m through 4000 m

Notice

You need to take the following precautions when transporting and storing lithium-ion batteries:

- Do not place lithium-ion batteries upside down.
- Prevent lithium-ion batteries from falling off.
- It is forbidden to transport lithium-ion batteries by air.
- During transportation, keep lithium-ion batteries from mechanical impact and direct exposure to rain or snow. The packaging box for the lithium-ion batteries should be labeled with signs such as "Handle with Care" and "Protect from Moisture." Otherwise, repair for any battery damage caused during transportation will not be covered under the warranty.

7.8.2 Storage and Maintenance at High and Low temperatures

The chemical characteristics of lithium-ion batteries determine that the use in high-temperature or low-temperature environments affects their lifespans. Therefore, a lithium-ion battery system should be used in an indoor environment with proper ventilation. In an outdoor scenario, do not install batteries on the direct ventilation cabinet within 14 km offshore. The BMS of the ZXESM R351 detects the temperatures of the battery cells. When the battery cell temperatures are too high or too low, measures are taken to control the current. For battery cell temperatures and the corresponding control actions, refer to Table 7-5.

Table 7-5 Cell Temperatures and Control Actions

Cell Temperature (°C)	Charging	Discharging
Above 65	Forbidden	Forbidden
60 to 65	Forbidden	Allowed
55 to 60	2 A	Allowed
10 to 55	Maximum current	Allowed
0 to 10	10 A	Allowed
–20 to 0	Forbidden	Allowed
Below –20	Forbidden	Forbidden

7.9 Battery Recharge Requirements

7.9.1 Recharge Prerequisites

Since manufacture, a lithium-ion battery should be properly recharged every six months if stored at 0 °C to 40 °C.

Long-term storage is not recommended and a battery must be put to use in time. To use a battery that has been stored for a long time, you must first charge the battery based on the storage temperature by referring to Table 7-6.

Table 7-6 Storage Requirements

Storage Temperature Range	0 °C Through 40 °C	Remarks
Recharge period	6 months	A bulging or leaking battery must be directly scrapped.

Note

You need to take the following precautions when storing and scrapping lithium-ion batteries:

- If the battery storage period expires, report to the department director in a timely manner.
- A deformed, damaged, or leaking battery must be directly scrapped regardless of its storage time.
- The storage time starts from the latest recharge time marked on the recharge label on a battery package. After a battery is properly recharged, you must change the last charge time and the next charge time accordingly (next charge time = last charge time + recharge period).
- During storage, a battery can be recharged three times at most. If a battery is not put to use after the maximum number is exceeded, you are advised to scrap it. The maximum storage time is 24 months. If a battery is not put to use after 24 months, you are advised to scrap it.

7.9.2 Battery Status Check

You need to take the following precautions when transporting and storing lithium-ion batteries:

- External view: Verify that the battery has no bulge, deformation, or leakage.
- Battery status: Power on the battery manually, and check the battery indicator status. Verify that the red ALM indicator neither flashes nor is solid on.
- Voltage measurement: The Lithium battery needs to be powered on before measurement. The open-circuit voltage of the lithium-ion battery system must be equal to or greater than 32 V:
  - → If the requirements are met, the battery can be recharged.
  - → If the requirements are not met, the battery must be separately marked and reported to ZTE technical support for further check.

7.9.3 Recharge Method

You can use a power system or a battery charger to recharge batteries. For the ZXESM R351 battery recharge parameters, refer to Table 7-7.

Table 7-7 Recharge Parameters

Recharge Parameter	Recommended Value
Charging voltage	52.5 V
Charging current coefficient	0.3 C
Charging termination current coefficient	0.05 C

Note

If the ALM indicator flashes when a battery is about to be fully charged, a cell under-consistency alarm occurs. Do not stop the charge immediately. Instead, keep the battery in charging state for 4 to 12 hours until the cell under-consistency fault is rectified.

7.9.4 Post-Recharge Actions

Perform the following operations after recharging the battery:

- After a recharge, remove the power cables and signal cables, and restore the power system parameters to the default values.
- Power off the battery by referring to "7.4 Battery Power-Off". Then pack and store the battery.
- The storage time starts from the latest recharge time marked on the recharge label on a battery package. After a battery is properly recharged, you must change the last charge time and the next charge time accordingly (next charge time = last charge time + recharge period).

Chapter 8
Protection Functions and Parameters

For a description of the protection functions and parameters of the ZXESM R351 lithium-ion battery, refer to Table 8-1.

Table 8-1 Protection Function and Parameter Description

No.	Alarm/Safety Feature	Unit	Range	Default Value	Remarks
1	Battery OVP Threshold	V	49.5 through 60	54.8	None.
2	Battery UVP Threshold	V	33.8 through 50	40.5	If the temperature of a cell is lower than 0°C, the UVP threshold is reduced by 3 V.
3	Charge OCP (Over-Current Protection) Threshold	C	0.3 through 6.25	1.15	None.
4	Discharge OCP Threshold	C	0.3 through 6.25	1.15	None.
5	Environment Temperature High Protection Threshold	°C	35 through 85	85	None.
6	Environment Temperature Low Protection Threshold	°C	–25 through 5	–25	None.
7	Charge Temperature High Protection Recovery Threshold	°C	45 through 60	57	None.
8	Discharge Temperature High Protection Threshold	°C	35 through 70	65	An alarm is raised only during the discharging.

No.	Alarm/Safety Feature	Unit	Range	Default Value	Remarks
9	Charge Temperature Low Protection Threshold	°C	–40 through 10	0	An alarm is raised only during the charging.
10	Discharge Temperature Low Protection Threshold	°C	–40 through 10	–20	An alarm is raised only during the discharging.

Chapter 9
Troubleshooting

Fault Diagnosis

For the common faults and solutions, refer to Table 9-1. In addition, you should check whether a fault is caused by the external environment, such as improper temperature or humidity, or overload.

Table 9-1 Troubleshooting Methods

Symptom	Cause	Solution
No response or indication when a battery is powered on or powered off	The battery has run down.	Turn on the switch and connect the battery to a charger to charge the battery and start the system.
	An internal fault occurs.	Contact ZTE technical support.
Short discharging time	The battery is not charged sufficiently.	Connect the equipment to the mains supply for more than eight hours continuously to fully charge the battery.
	Short discharging time.	Check the load status of the battery, and remove non-critical devices or increase the number of parallel batteries.
	A battery is aged or its capacity is decreased.	Replace the battery. Contact ZTE for a new battery and components.

If the battery still fails to operate properly after you perform the steps described in the preceding table, contact ZTE technical support. To report a fault to ZTE, make sure that you include the following information:

- Product model
- Batch number
- Fault occurrence date
- Complete problem description, including the indicators, power, and load capacity.

Notice

Only qualified engineers are allowed to repair the battery system.

Special Cases

For more information about how to handle faults in special cases, refer to Table 9-2.

Table 9-2 Special Cases

Case	Symptom	Action
Long-term power outage	If the AC power supply fails, the ZXESM R351 lithium-ion battery system is switched over to supply power. If the supplied power exceeds the rated capacity of 100 Ah, under-voltage protection is enabled.	● After under-voltage protection is enabled, the battery system can be fully charged without maintenance if the AC power supply resumes within seven days. ● If the AC power supply fails for more than seven days, you should charge the battery system as soon as possible. Otherwise, the battery lifespan is reduced.
Disasters	Communication device failure caused by disasters, for example, lightning strikes, floods, earthquakes, and fires.	● Proper prevention measures should be taken first. ● Proper measures and human and material resources should be prepared for communication offices to deal with disasters. ● Emergency state management regulations and major accident repair procedures should be formed for communication offices.

Default Alarms and Protection Information

For the default alarms and protection information, refer to Table 9-3.

Table 9-3 Default Alarms and Protection Information

Alarm Type No.	Alarm Type	Default Alarm Level	ALM Indicator Status	Remarks
1	Discharge over-current protection	Critical	Flashing slowly	When the load is too large and the discharge current exceeds the discharge current protection threshold, the battery will cut off the discharge circuit. After some loads are removed, the battery is automatically discharged. In this case, verify that the system configuration is reasonable. (Whether the load is too high or not).
2	Battery over-voltage protection	Critical	Flashing slowly	During the charging process, when the battery voltage exceeds the protection threshold, the system stops charging. In most cases, powering off the mains supply, or connecting load to discharge, the alarm is cleared automatically.

Alarm Type No.	Alarm Type	Default Alarm Level	ALM Indicator Status	Remarks
3	Board over-temperature protection	Critical	Flashing slowly	BMS high temperature, battery protection, and stop charging or discharging, In this case, verify that the system configuration is reasonable. (Check whether the ambient temperature or load is too high.)
4	Charge over-current	Shielded	Flashing slowly	This alarm is raised when the charging current exceeds the overcurrent alarm threshold. Normally, reduce the charging current of the mains supply. the alarm is cleared automatically. In this case, verify that the system configuration is reasonable. (Check whether the charging coefficient of the power supply is set too high.)
5	Discharge over-current	Shielded	Flashing slowly	The load is too large, and an alarm is generated when the discharge current exceeds the discharge current threshold. After some loads are removed, the battery is automatically discharged. In this case, verify that the system configuration is reasonable. (Whether the load exceeds the maximum capacity of the battery).
6	Battery over-voltage	Shielded	Flashing slowly	This alarm is generated when the battery pack voltage exceeds the alarm threshold during the charging process. This alarm does not need to be handled. It can be automatically cleared after the Charging stopped, or battery discharge.
7	Ambient over-temperature	Shielded	Flashing slowly	This alarm is raised when the environmental temperature exceeds the threshold. In this case, verify that the system configuration is reasonable. (For example, the ambient temperature exceeds the maximum operating temperature of the device or the load is too high.) This alarm can be cleared automatically in most cases.
8	Ambient under-temperature	Shielded	Flashing slowly	This alarm is raised when the environmental temperature is lower than the threshold. In this case, verify that the system configuration is reasonable. (For example, the ambient temperature is too low.) This alarm can be cleared automatically in most cases.

Alarm Type No.	Alarm Type	Default Alarm Level	ALM Indicator Status	Remarks
9	Battery under-voltage	Shielded	Flashing slowly	This alarm is raised when the battery pack voltage is lower than the threshold. This alarm does not need to be handled. It is automatically cleared.
10	Battery under-voltage protection	Critical	Flashing slowly	Protection when the battery pack voltage is lower than the threshold. This protection does not need to be handled. It is automatically cleared.
11	Cell over-voltage	Shielded	Flashing slowly	This alarm is raised when the cell voltage exceeds the alarm threshold during the charging. This alarm does not need to be handled. It is automatically cleared.
12	Cell over-voltage protection	Critical	Flashing slowly	This protection is generated when the cell voltage exceeds the protection threshold during charging. In most cases, powering off the mains supply, or connecting load to discharge, the alarm is cleared automatically.
13	Cell under-voltage	Shielded	Flashing slowly	This alarm is generated when the cell voltage is lower than the alarm threshold. This alarm does not need to be handled. It is automatically cleared.
14	Cell under-voltage protection	Critical	Flashing slowly	This alarm is generated when the cell voltage is lower than the protection threshold. This alarm does not need to be handled. It is automatically cleared. If the battery remains in undervoltage protection status for a long time, you need to check the mains supply of the site, or check whether the power device operates properly.
15	Cell charge over-temperature	Shielded	Flashing slowly	This alarm is generated when the battery cell temperature exceeds the alarm threshold during charging. This alarm does not need to be handled. It is automatically cleared.
16	Cell charge over-temperature protection	Critical	Flashing slowly	This alarm is generated when the battery cell temperature exceeds the protection threshold during charging. In this case, verify that the system configuration is reasonable. (For example, the ambient temperature exceeds the maximum operating temperature of the device.)

Alarm Type No.	Alarm Type	Default Alarm Level	ALM Indicator Status	Remarks
17	Cell discharge over-temperature	Critical	Flashing slowly	This alarm is generated when the battery cell temperature exceeds the alarm threshold during discharging. This alarm does not need to be handled. It is automatically cleared.
18	Cell discharge over-temperature protection	Critical	Flashing slowly	This alarm is generated when the battery cell temperature exceeds the protection threshold during discharging. In this case, verify that the system configuration is reasonable. (For example, the ambient temperature exceeds the maximum operating temperature of the device, or the load exceeds the maximum capacity of the battery .)
19	Cell charge under-temperature	Shielded	Flashing slowly	This alarm is generated when the battery cell temperature is lower than the alarm threshold during charging. This alarm does not need to be handled. It is automatically cleared.
20	Cell charge under-temperature protection	Critical	Flashing slowly	This alarm is generated when the battery cell temperature is lower than the protection threshold during charging. Check whether the operating temperature of the battery is lower than the rechargeable temperature range.
21	Cell discharge under-temperature	Critical	Flashing slowly	This alarm is generated when the battery cell temperature is lower than the alarm threshold during discharging. Check whether the environment temperature exceeds the operating temperature range.
22	Cell discharge under-temperature protection	Critical	Flashing slowly	This alarm is generated when the battery cell temperature is lower than the protection threshold during discharging. Check whether the operating temperature of the battery is lower than the discharging temperature range.
23	Cell under-consistency	Shielded	Flashing slowly	At the same time, different cells in the battery pack are different. This alarm is generated when the difference meets the consistency alarm threshold. This alarm does not need to be handled, but can be cleared automatically.
24	Cell under-consis-	Critical	Flashing slowly	At the same time, different cells in the battery pack are different. This alarm is generated when the difference meets the consistency protection threshold.

Alarm Type No.	Alarm Type	Default Alarm Level	ALM Indicator Status	Remarks
	tency protection			This alarm does not need to be handled, but can be cleared automatically. Contact ZTE technical support.
25	Battery under-SOC	Shielded	Flashing slowly	This alarm is generated when the battery level is lower than the SOC alarm threshold. This alarm does not affect charging or discharging. This alarm does not need to be handled, It is automatically cleared.
26	Battery under-SOC protection	Shielded	Flashing slowly	This alarm is generated when the battery level is lower than the SOC protection threshold. This protection switches the charging and discharging circuits. This alarm does not need to be handled, It is automatically cleared.
27	Battery SOH fault	Critical	Flashing slowly	Battery SOH fault, SOH is the percentage of the maximum electricity output by the battery to the nominal battery capacity. If the ratio is smaller than the alarm threshold, this alarm is raised. This alarm does not affect charging or discharging. This fault does not need to be handled temporarily. It will not be automatically cleared.
28	Battery SOH protection	Critical	Flashing slowly	Battery SOH protection, SOH is the percentage of the maximum electricity output by the battery to the nominal battery capacity. If the ratio is smaller than the protection threshold, this alarm is raised. This protection switches the charging and discharging circuits. Contact ZTE technical support to replace the battery.
29	Cell damage protection	Critical	Flashing slowly	Cell damage protection. This alarm will be raised if the voltage of any single cell is lower than 1.5 V. This protection switches the charging and discharging circuits. Contact ZTE technical support to replace the battery.
30	Battery loss	Shielded	Flashing slowly	Verify that the battery is not stolen.
31	BDU EEPROM fault	Critical	Flashing slowly	BDU EEPROM fault. That is the read-write memory fails. it is verified by software. There is no threshold. The battery system cannot operate properly due to this fault. Disconnect the charging and discharging circuits, Contact ZTE technical support to replace the battery.

Alarm Type No.	Alarm Type	Default Alarm Level	ALM Indicator Status	Remarks
32	Cell voltage sampling error	Critical	Flashing slowly	Cell voltage sampling error. This alarm is raised when the sampled values of the chip are not read. There is no threshold. Contact ZTE technical support.
33	Charge circuit failure	Critical	Solid on	Charge circuit failure. This alarm is raised if there is still current during charging protection. There is no threshold. Contact ZTE technical support.
34	Discharge circuit failure	Critical	Solid on	Discharge circuit failure. This alarm is raised if there is still current during discharging protection. There is no threshold. Contact ZTE technical support.
35	Current-limiting circuit failure	Critical	Solid on	This alarm is raised when the charging current cannot reach the target value during charging current control. There is no threshold. Contact ZTE technical support.
36	Battery short circuit	Critical	Flashing slowly	It usually happens during the first site installation. Check whether the cable connection Is incorrect.
37	Reverse battery polarity	Critical	Flashing slowly	Reverse battery polarity, it usually happens during the first site installation. Check whether the cable connection Is incorrect.
38	Invalid cell temperature	Critical	Flashing slowly	Invalid cell temperature, the temperature sampling information of a single cell is out of the normal range of sensor detection. Contact ZTE technical support.
39	BDU battery under-voltage protection	Critical	Flashing slowly	The battery voltage is lower than the protection threshold (40 V). Disconnect the discharging circuits. After the battery is recharged, the alarm is cleared automatically.
40	Vibration	Shielded	Flashing slowly	Check whether batteries are moved or stolen.
41	BDU busbar under-voltage protection	Critical	Flashing slowly	This alarm is generated when the busbar voltage is lower than the threshold. In this case, verify that the system configuration is reasonable. (For example, the load exceeds the maximum capacity of the battery.)
42	BDU busbar over-voltage protection	Critical	Flashing slowly	This alarm is raised when the busbar voltage is higher than 63 V. Verify that the power voltage is set properly.

Alarm Type No.	Alarm Type	Default Alarm Level	ALM Indicator Status	Remarks
43	BDU communication failure	Critical	Flashing slowly	BDU communication failure, this alarm is raised when communication between internal boards fails. There is no threshold. The power system cannot operate properly. Contact ZTE technical support.
44	BDU battery charge under-voltage protection	Critical	Flashing slowly	This alarm is generated when the battery is discharged to 35 V or below. Contact ZTE technical support.
45	BDU battery barring	Critical	Flashing quickly	This alarm is raised when a charging or discharging fault occurs. The power system cannot operate properly. Contact ZTE technical support.
46	Ambient overtemperature protection	Critical	Flashing slowly	This alarm is raised when the environmental temperature of the device is too high. In this case, verify that the system configuration is reasonable. (For example, the ambient temperature exceeds the maximum operating temperature of the device.)
47	Ambient under-temperature protection	Shielded	Flashing slowly	This alarm is raised when the environmental temperature of the device is too low. In this case, verify that the system configuration is reasonable. (For example, The ambient temperature is lower than the lowest operating temperature of the device.)
48	Board overtemperature	Critical	Flashing slowly	This alarm is raised when the board temperature is too high. In this case, verify that the system configuration is reasonable. (For example, Check whether the ambient temperature of the device is too high, or Whether the load of the power system is too large.)
49	Alarm about a failed ambient temperature sensor	Critical	Flashing slowly	This alarm is raised when the ambient temperature sensor is damaged. To clear the alarm, you need to contact ZTE technical support.
50	Battery equalization circuit fault alarm	Critical	Flashing slowly	This alarm is raised when the battery equalization circuit is damaged. To clear the alarm, you need to contact ZTE technical support.
51	Voltage sampling fault	Critical	Flashing slowly	This alarm is raised when the voltage sampling circuit is damaged. To clear the alarm, you need to contact ZTE technical support.

Chapter 10
Discharge Curves

is similar to that of a common lithium battery, and supports charging and discharging at a maximum of 1 C.

Figure 10-1 shows the battery 0.2 C discharge curves.

Figure 10-1 0.2 C Discharge Curves of the ZXESM R351 in the Independent Scenario

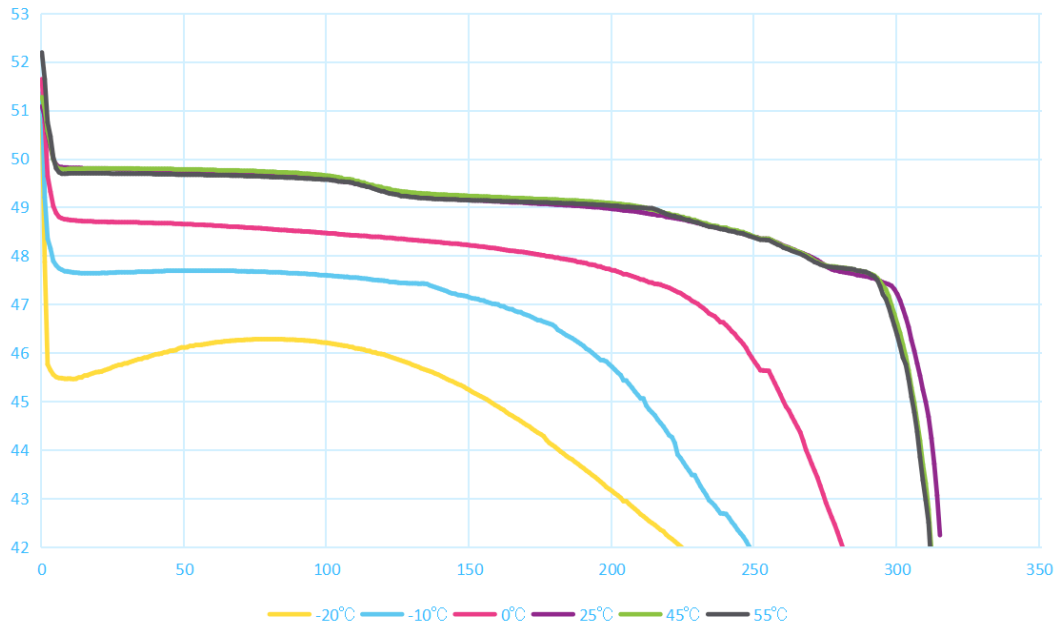

Note

The curves are for reference only. The actual test shall prevail.

Chapter 11
Technical Specifications

For the technical specifications of the ZXESM R351, refer to Table 11-1.

Table 11-1 Technical Specifications

Parameter	Specification
External dimensions (H×W×D)	● ≤ 130.5 mm × 442 mm × 400 mm (excluding handles and flanges). ● ≤ 130.5 mm × 483 mm × 400 mm (including handles and flanges, excluding connectors).
Weight	≤ 43 kg.
Capacity	100 Ah (C_5, 25°C, 40.5 V).
Energy	4800 Wh (C_5, 25°C, 40.5 V).
Material	Ferrous lithium phosphate ($LiFePO_4$).
Charging voltage range	52.5 V through 54.5 V.
Charging current range	0 through 100 A.
Charging temperature range (ambient temperature)	0°C through 55°C. Note: The recommended range is 20°C through 35°C. If it is above 40°C, an air conditioner should be configured. In an environment where the ambient temperature is lower than 0°C, a low-temperature heater should be configured in the cabinet to raise the cabinet temperature above 0°C so that charging is allowed.
Discharging voltage range	40.5 V through 52.5 V.
Discharging current range	0 through 100 A.
Discharging temperature range (Ambient temperature)	-20°C through 55°C (The recommended range is 20°C through 35°C. If it is above 40°C, an air conditioner should be configured).
long-term storage temperature range	0°C through 40°C.
Self-discharging	≤ 5% (90 days).
Battery memory effect	None.
Humidity range	5% RH through 95% RH.

Parameter	Specification
Atmospheric pressure range	70 kPa through 106 kPa.
Protection Level	IP40.
Parallel connection	16 battery systems.
Communication protocol	YD/T 1104.
Other interfaces	RS485.
Environmental attribute	HSF-S.

Glossary

OVP

- Overvoltage Protection

BMS

- Battery Management System

EEPROM

- Electrically Erasable Programmable Read-Only Memory

FSU

- Field Supervision Unit

LED

- Light Emitting Diode

O&M

- Operation & Maintenance

OCP

- Overcurrent Protection

OVP

- Overvoltage Protection

RST

- Reset

SOC

- State of Charge

SOH

- State of Health